REV.	DESCRIPTION	DATE
A	RELEASED	02/06/03
B	更改料號	04/25/03
C	修改夾腳間距	08/05/03

Part Number: WDR2S-240-D4N11B3W

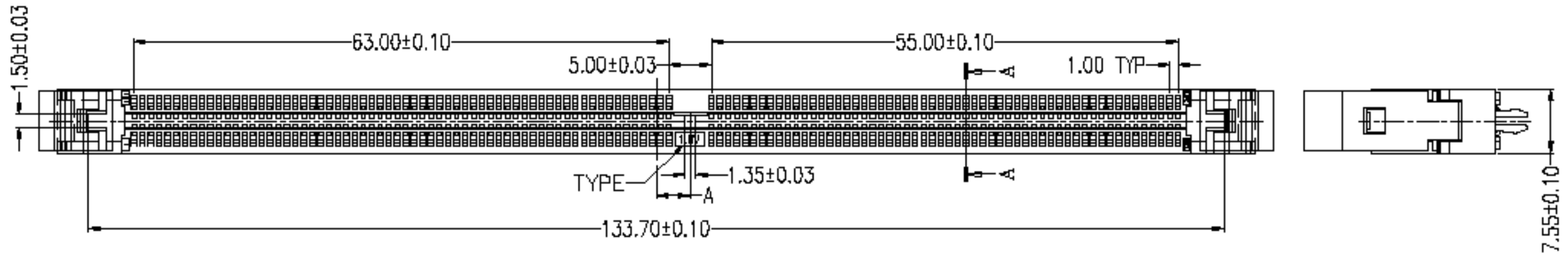

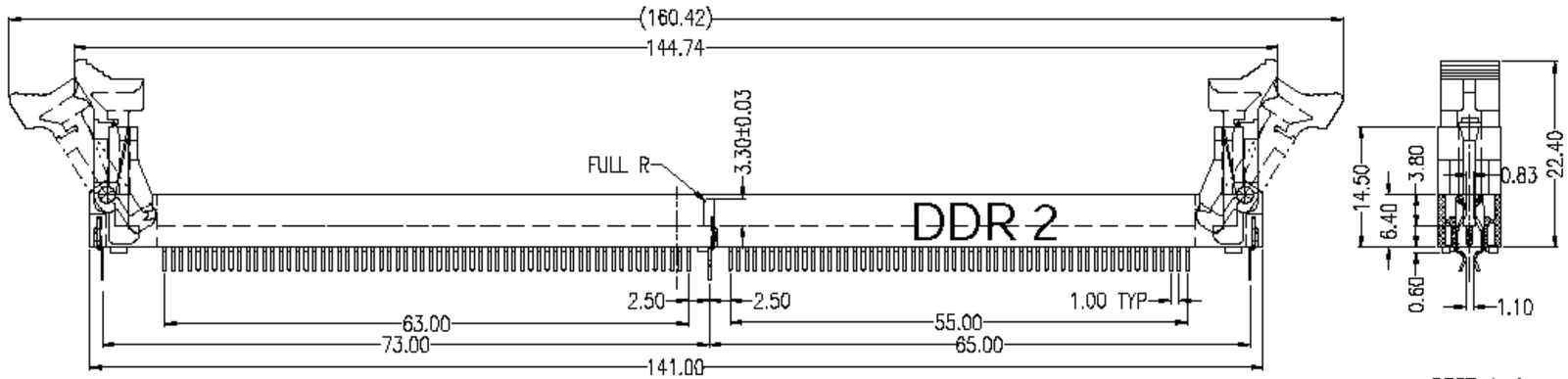

SECT A-A

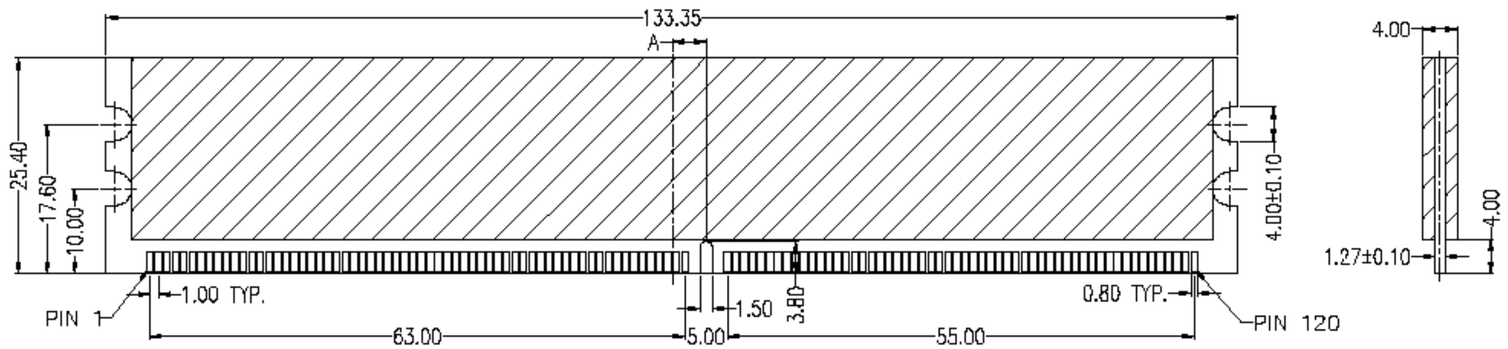

Recommended Module Layout

NOTES

*Material:

Body: Nylon66,Glass Filled UL 94-0 Rated; Color:Black.
Ejector: Nylon66,Glass Filled UL 94V-0 Rated, Color:Ivory.
Contact: Brass
Contact Plating: Gold Plating Over Nickel on Contact Area Tin/Lead. Plating on Terminal.

*Mechanical:

Retention Force-Terminal: 300 Grams Min. Per
Insertion Force: 35 lb. Max.
Unmating Force: 14 Grams Min. Per Pin Pair.

*Electrical Specification:

Contact Resistancr: 30 Milliohms Max. Intial
Insulation Resistance: 1000 Megohms Min. at 500 V DC.
Withstand Voltage: 500 V AC,

*Environmental:

Operating Temperature: -55°C to +105°C

*How to Order:

WDR2S-240-D4N11B3W

- W:Winning Mark 空白:No Mark
- 1:None Post 3:Metal Post
- B:Brass P:Phosphor Bronze
- 1:DIM A=4.00,TAPE:1.8V
- 2:DIM A=3.00,TAPE:2.5V
- 3:DIM A=5.00,TAPE:OPEN
- 1:Black 4:Blue 6:Red
- 8:Purple 9:Gray B:Orange
- N:Nylon L:LCP
- 4:Straddle Type
- A:Flash B:5u" C:10u" D:15u"
- NO. of Contacts
- Series NO.

檔名 F/Name	D:\DDR\APPROVED\013.DWG	T E L	(代表號)	未註入公差 Tolerance Unless Otherwise Specified	設計 Designed	製圖 Drawing	檢圖 Reviewed	承認 Approved	單位 Unit	mm	比例尺 Scale	3:2	Third Angle Projection
品名 P/Name	DDR2-240 Pins Connectors(夾腳型)	F A X		.X ~ ±0.38					日期 Date	08/05/03	Sheet	1 Of 1	
公司 CO/Name				.XX ~ ±0.25					圖名 Name	DDR2-240 Pins 承載圖(夾腳型)			REV
				.XXX ~ ±0.20					圖號 Drawing No.	DDR-240MD-AN-W024			C
				Angle ~ ± 3°									